River Crossing

UNIT ONE

A Subdivision of 223.33 acres,
being
209.97 acres out of the
William G. Strawn Survey No. 74
13.36 acres out of the
Jacob Moos Survey No. 852, Subdivision No. 1
Comal County, Texas
116 Lots

#9906027047

STATE OF TEXAS*
COUNTY OF COMAL*

KNOW ALL MEN BY THESE PRESENTS:
The owner of the land shown on this plat and whose name is subscribed hereto, and in person or through a duly authorized agent, hereby dedicates to the use of the public forever all Streets, Parks, Water Courses, Drains, Easements, and Public places thereon shown for the purposes and considerations therein expressed.

SOUTHERLAND/RCR VENTURE, LTD.

By: _____

ITS GENERAL PARTNER
TEXAS SOUTHERLAND CORPORATION
CHARLES D. PATTERSON, PRESIDENT
P.O. BOX 1629
WIMBERLEY, TEXAS 78676

STATE OF TEXAS*
COUNTY OF COMAL*

BEFORE ME, the undersigned authority, appeared Charles D. Patterson, known to me to be the person whose name is subscribed to the foregoing instrument, and acknowledged to me that he executed the same for the purposes and considerations therein expressed, and in the capacity therein stated.

10-6-99

Notary Public, State of Texas
Richard McDaniel

RICHARD McDANIEL
MY COMMISSION EXPIRES
August 17, 2001

My Commission Expires: _____

This Plat of RIVER CROSSING UNIT ONE has been submitted to and considered by the Commissioners Court of Comal County, Texas and is hereby approved for filing by said Court on 10/7, 1999.

Dated this 7 day of Oct, A.D., 1999.

By: _____
County Judge

Attest: _____
County Clerk - Deputy

COMMISSIONERS' COURT COMAL COUNTY, TEXAS

STATE OF TEXAS*
COUNTY OF COMAL*

I, Joy Streater, County Clerk of Comal County do hereby certify that this plat was filed for record in my office on the 7th day of October, A.D., 1999, at 3:02 P.M. and duly recorded the 7th day of October, A.D., 1999, at 3:04 P.M. in the Records of Maps and Plats in said office, of said County, in Book Volume 13, on Page(s) 110 - 114 in testimony whereof witness my hand and official seal of office this 7th day of October A.D., 1999.

JOY STREATER, COUNTY CLERK
COMAL COUNTY, TEXAS

By: Charlotte H. Boyd
Deputy

COUNTY COURT OF COMAL COUNTY TEXAS

STATE OF TEXAS*
COUNTY OF COMAL*

I hereby certify that this plat is true and correct and was prepared from an actual survey of the property made under my supervision on the ground.

9/24/99

Kelly Kilber
Registered Professional Land Surveyor No. 2219

STATE OF TEXAS
KELLY KILBER
2219
PROFESSIONAL LAND SURVEYOR

Sworn to and subscribed before me this the 24 day of September, A.D., 1999.

Notary Public
State of Texas
Richard McDaniel

RICHARD McDANIEL
MY COMMISSION EXPIRES
August, 2001

SURVEYOR
PRO-TECH ENGINEERING GROUP, Inc.
Kelly Kilber, R.P.L.S.
100 E. San Antonio St., Suite 100
San Marcos, Texas 78666
(512) 353-3335

PLAN 5297
EO 14645
..\14645\UNIT ONE LOTS\14645one1.dwg
09/24/99 JMF

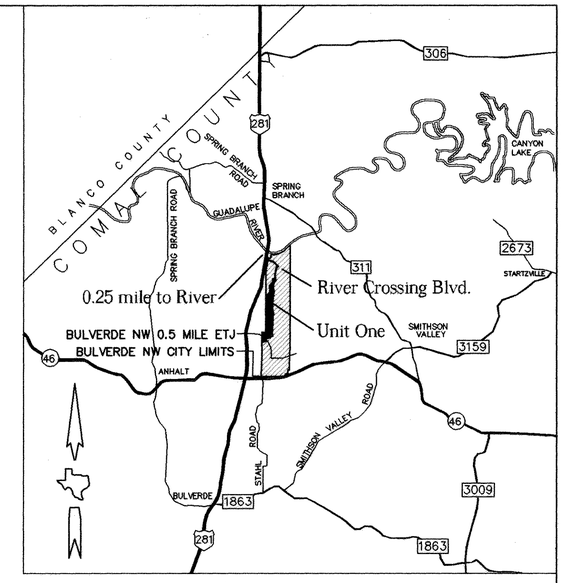

Location Map
Not to Scale

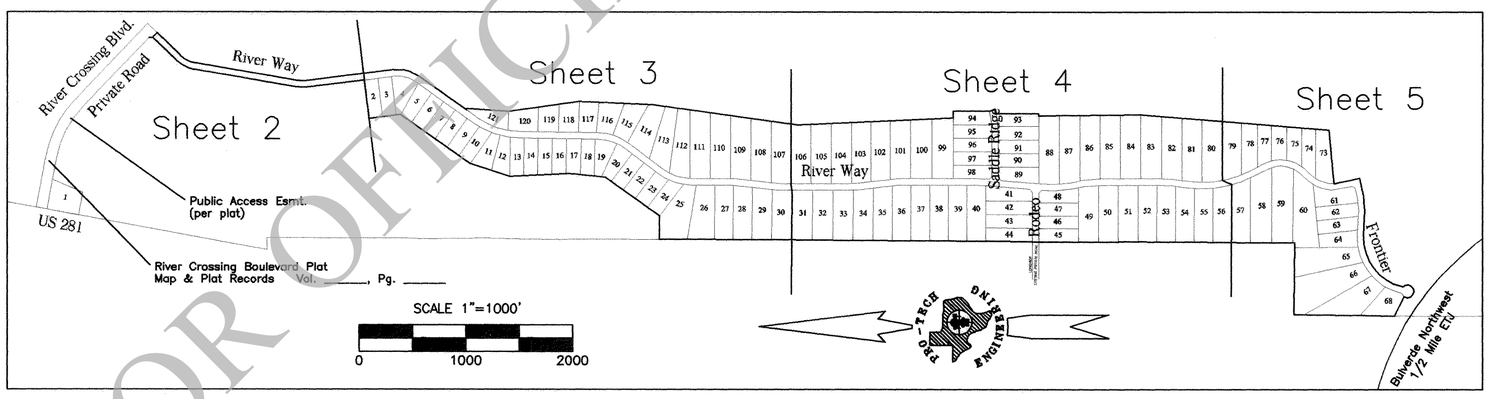

NOTES:

1. This subdivision is to be served by a certified public water supply system.
2. No structure in this subdivision shall be occupied until connected to a private on-site sewage facility approved under the rules of Comal County for Private Sewage Facilities.
3. Property owners are advised that they are responsible for maintenance of dedicated easements on their property and that they may not utilize these easements for any purpose detrimental to their intended use (e.g. no structures, septic tank fields, etc.). Grantees of said dedicated easements reserve the right of access to such easements.
4. There is hereby dedicated a twenty (20) foot wide Public Utility, Drainage, and Embankment/Backslope easement adjacent to all street right-of-way lines.
5. There is hereby dedicated a ten (10) foot wide Public Utility and Drainage Easement adjacent to all non-street lot lines.
6. Topographic information shown hereon was provided by GEODETIX, INC. Contours are shown at intervals of 10 feet.
7. Comal County requires a minimum twenty-five (25) foot building set-back line from road frontage.
8. No driveway shall be constructed between the lots and abutting right-of-way without first obtaining a Driveway Permit from the Comal County Road Department.
9. Interior cross fences exist within the boundaries of this subdivision.
10. This subdivision does not lie within the Recharge Zone of the Edwards Aquifer.
11. This subdivision does not lie within the extraterritorial jurisdiction of any city.
12. A portion of this subdivision has been designated as being in Special Flood Hazard Zone "A" as delineated on the Flood Insurance Rate Map (FIRM) Panel No.'s 485463 0035 C and 0040 C.
13. There are no existing improvements with the exception of fences within the limits of this subdivision.

SUBDIVISION SUMMARY

116 LOTS, BEING 203.64 ACRES, SAME BEING 191.39 ACRES OUT OF THE WILLIAM G. STRAWN SURVEY No. 74, AND 12.25 ACRES OUT OF THE JACOB MOOS SURVEY No. 852, SUBDIVISION No. 1

COUNTY ROADS:

14,665 LINEAR FEET OF ROADS, BEING 19.69 ACRES, SAME BEING 18.58 ACRES OUT OF THE WILLIAM G. STRAWN SURVEY No. 74 AND 1.11 ACRES OUT OF THE JACOB MOOS SURVEY No. 852, SUBDIVISION No. 1 DEDICATED TO THE PUBLIC AS RIGHT-OF-WAY

PRO-TECH ENGINEERING GROUP INCORPORATED
100 E. San Antonio St., Suite 100
San Marcos, TX. 78666
(512) 353-3335

VOL. 13 pg. 110

OFFICIAL USE
NOT FOR

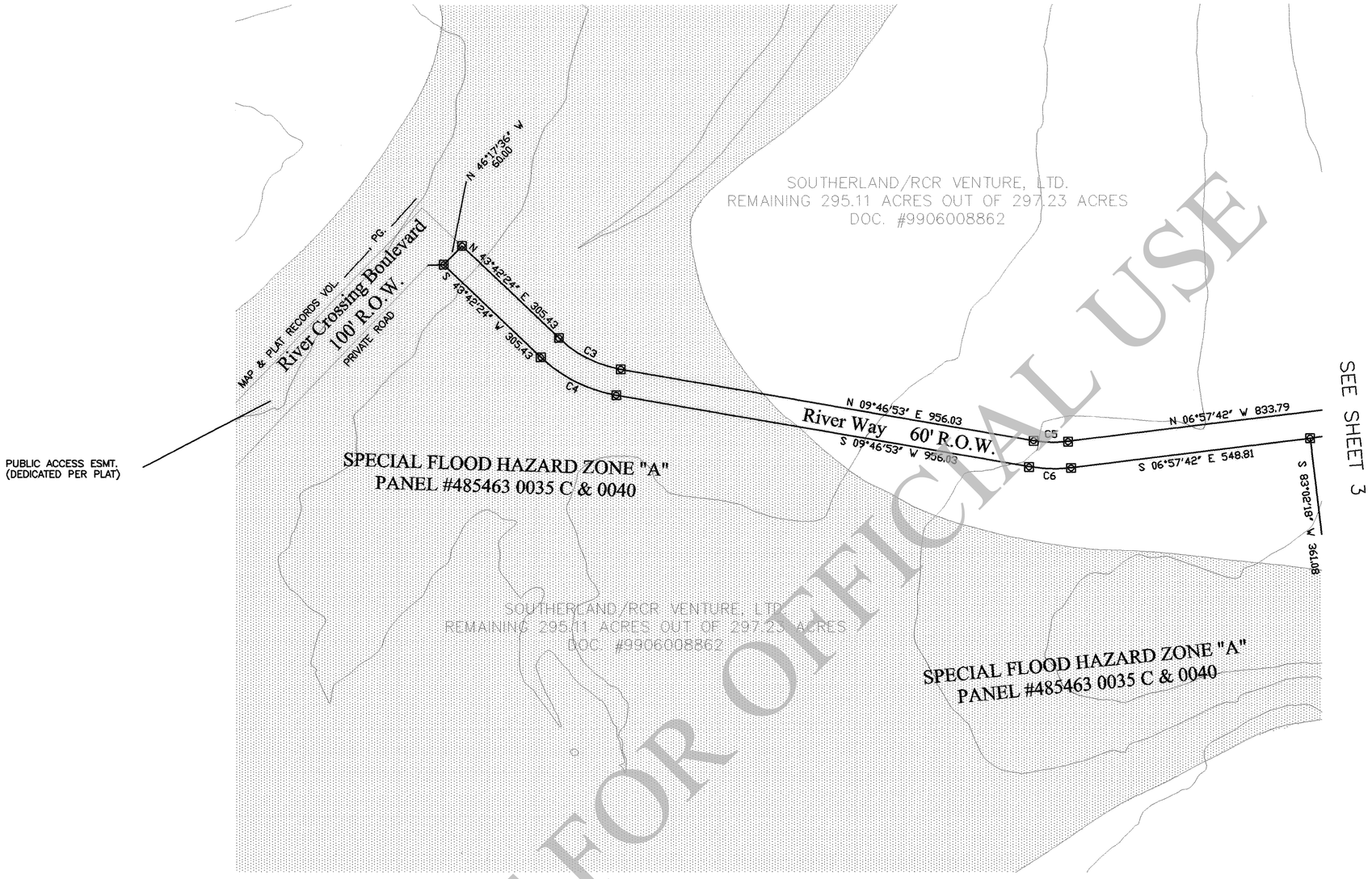

NOT FOR OFFICIAL USE

LEGEND

- ◎ IRON STAKE FOUND
- ⊠ IRON STAKE WITH ALUMINUM CAP (PRO-TECH ENG. 2219) SET
- ● ANGLE IN FENCE/FENCE POST
- □ CONCRETE MONUMENT FOUND
- —— X —— FENCE LINE
- —— P —— OVERHEAD UTILITY LINE
- (VOL/PG) COMAL COUNTY REAL PROPERTY RECORDS
- DOC # COMAL COUNTY REAL PROPERTY RECORDS DOCUMENT NUMBER
- [VOL/PG] COMAL COUNTY MAP AND PLAT RECORDS
- ( ) DENOTES RECORD INFORMATION

SCALE 1"=200'

0 200 400

NUMBER	ARC LENGTH	DELTA ANGLE	RADIUS	CHORD DIRECTION	CHORD LENGTH
C3	159.86	33°55'28"	270.00	S 26°44'39" W	157.54
C4	195.39	33°55'29"	330.00	S 26°44'39" W	192.55
C5	78.90	16°44'35"	270.00	N 01°24'36" E	78.62
C6	96.43	16°44'35"	330.00	S 01°24'36" W	96.09

PRO·TECH ENGINEERING GROUP
INCORPORATED
100 E. San Antonio St., Suite 100
San Marcos, TX. 78666
(512) 353-3335

PLAN 5297

EO 14645

..\14645\UNIT ONE LOTS\14645one2.dwg

09/24/99 JMF

Vol 13 pg. 111

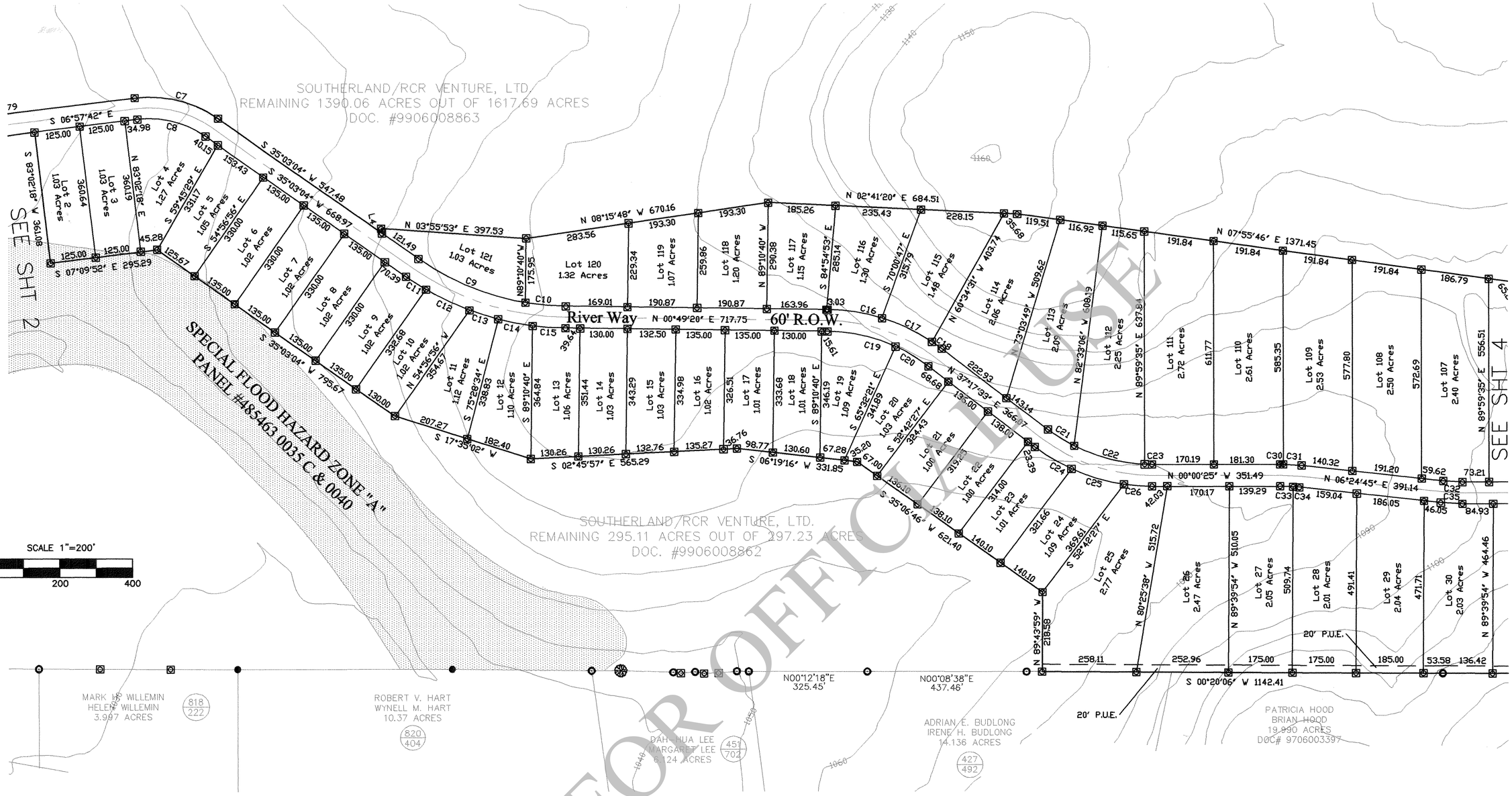

LEGEND

- ◎ IRON STAKE FOUND
- ⊡ IRON STAKE WITH ALUMINUM CAP (PRO–TECH ENG. 2219) SET
- ● ANGLE IN FENCE/FENCE POST
- □ CONCRETE MONUMENT FOUND
- —— X —— FENCE LINE
- —— P —— OVERHEAD UTILITY LINE
- (VOL/PG) COMAL COUNTY REAL PROPERTY RECORDS
- DOC # COMAL COUNTY REAL PROPERTY RECORDS DOCUMENT NUMBER
- [VOL/PG] COMAL COUNTY MAP AND PLAT RECORDS
- ( ) DENOTES RECORD INFORMATION

NUMBER	ARC LENGTH	DELTA ANGLE	RADIUS	CHORD DIRECTION	CHORD LENGTH
C7	241.97	42°00'45"	330.00	N 14°02'41" E	236.59
C8	197.99	42°00'50"	270.00	S 14°02'41" W	193.58
C9	318.70	25°21'39"	720.00	N 22°22'14" E	316.10
C10	111.43	08°52'03"	720.00	N 05°15'22" E	111.32
C11	64.69	04°45'06"	780.00	S 32°40'32" W	64.67
C12	132.01	09°41'48"	780.00	S 25°27'05" W	131.85
C13	82.76	06°04'45"	780.00	S 17°33'49" W	82.72
C14	95.97	07°02'59"	780.00	S 10°59'57" W	95.91
C15	90.56	06°39'08"	780.00	S 04°08'54" W	90.51
C16	151.87	16°25'04"	530.00	N 09°01'53" E	151.35
C17	152.86	16°31'30"	530.00	N 25°30'11" E	152.33
C18	32.63	03°31'37"	530.00	N 35°31'44" E	32.62
C19	193.91	23°38'21"	470.00	N 12°38'29" W	192.54
C20	105.26	12°49'54"	470.00	S 30°52'36" W	105.04
C21	84.60	10°18'49"	470.00	N 32°08'07" E	84.49

NUMBER	ARC LENGTH	DELTA ANGLE	RADIUS	CHORD DIRECTION	CHORD LENGTH
C22	201.54	24°34'08"	470.00	N 14°41'38" E	200.00
C23	19.82	02°24'59"	470.00	N 01°12'04" E	19.82
C24	117.57	12°42'36"	530.00	S 30°56'14" W	117.33
C25	150.30	16°14'53"	530.00	N 16°27'29" W	149.80
C26	77.16	08°20'28"	530.00	N 04°09'49" W	77.09
C30	8.70	00°56'26"	530.00	N 00°27'48" E	8.70
C31	50.68	05°28'43"	530.00	N 03°40'22" E	50.66
C32	52.66	06°25'10"	470.00	N 03°12'10" E	52.63
C33	35.74	04°21'24"	470.00	S 02°10'17" W	35.73
C34	16.92	02°03'46"	470.00	S 05°22'51" W	16.92
C35	59.38	06°25'10"	530.00	S 03°12'10" W	59.35

NUMBER	DIRECTION	DISTANCE
L4	S 80°03'04" W	13.31

NOT FOR OFFICIAL USE

PRO-TECH ENGINEERING GROUP INCORPORATED
100 E. San Antonio St., Suite 100
San Marcos, TX. 78666
(512) 353-3335

PLAN 5297

EO 14645

..\14645\UNIT ONE LOTS\14645one3.dwg
09/24/99 JMF

Vol 13 pg 112

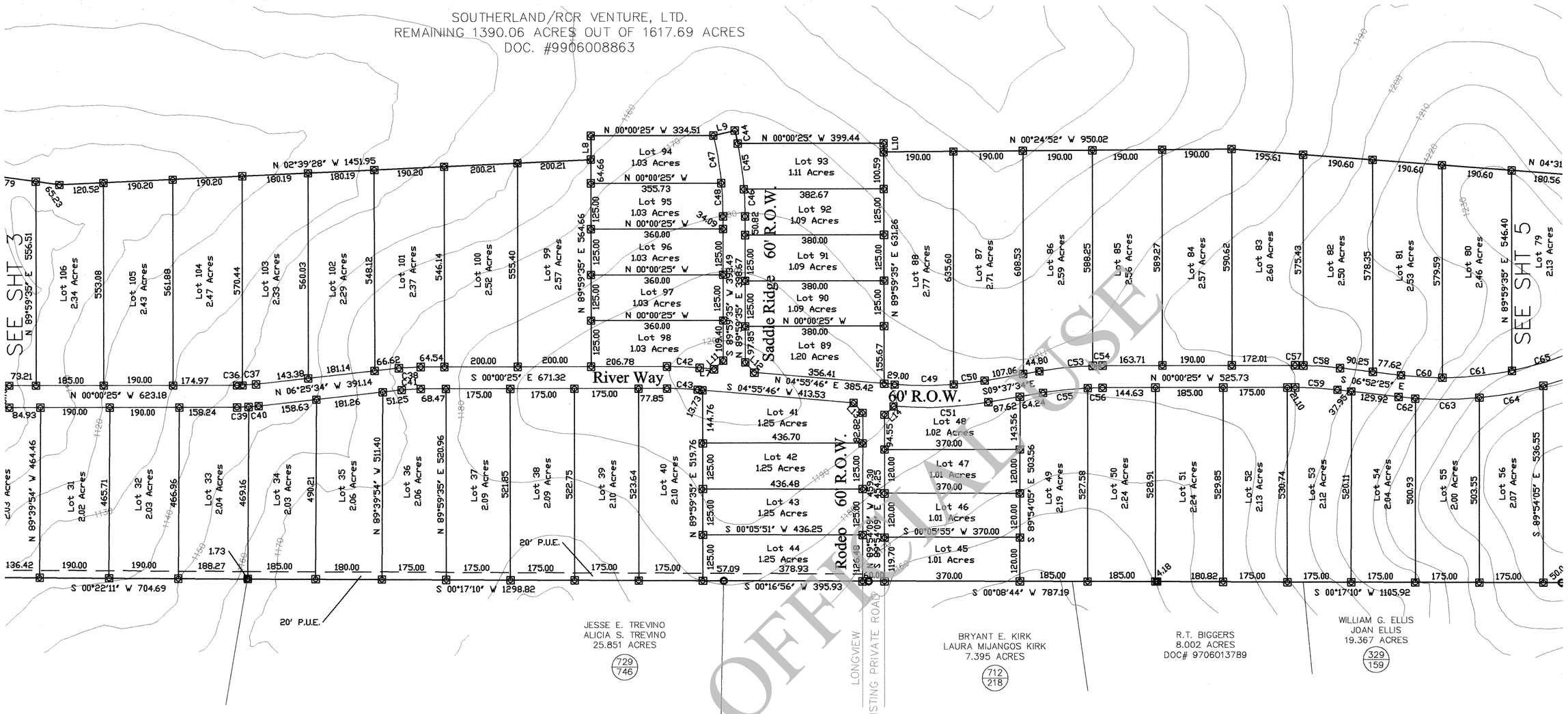

NUMBER	ARC LENGTH	DELTA ANGLE	RADIUS	CHORD DIRECTION	CHORD LENGTH
C36	15.03	01°49'56"	470.00	N 00°55'23" W	15.03
C37	37.63	04°35'14"	470.00	N 04°07'58" W	37.62
C38	59.38	06°25'10"	530.00	N 03°13'00" W	59.35
C39	31.79	03°26'10"	530.00	S 01°43'30" E	31.78
C40	27.59	02°58'59"	530.00	S 04°56'05" E	27.59
C41	52.66	06°25'09"	470.00	S 03°13'00" E	52.63
C42	88.74	04°56'10"	1030.00	N 02°27'41" E	88.71
C43	83.58	04°56'12"	970.00	S 02°27'41" W	83.55
C44	36.21	02°00'52"	1030.00	N 77°50'09" E	36.21
C45	126.20	07°01'12"	1030.00	N 82°21'11" E	126.12
C46	74.25	04°07'48"	1030.00	N 87°55'41" E	74.23
C47	131.82	07°47'11"	970.00	S 80°43'19" W	131.72
C48	91.04	05°22'40"	970.00	S 87°18'15" W	91.01
C49	161.29	09°31'36"	970.00	N 00°09'57" E	161.10
C50	85.13	05°01'42"	970.00	N 07°06'43" W	85.10
C51	259.66	14°26'38"	1030.00	S 08°24'15" E	258.97
C53	146.63	08°09'24"	1030.00	N 05°32'52" W	146.51
C54	26.29	01°27'45"	1030.00	N 00°44'17" W	26.29
C55	122.46	07°14'01"	970.00	S 06°00'34" E	122.38
C56	40.39	02°23'09"	970.00	S 01°11'59" E	40.39
C57	22.99	01°16'44"	1030.00	N 00°37'57" E	22.99
C58	100.70	05°36'06"	1030.00	N 04°04'22" W	100.66
C59	116.49	06°52'51"	970.00	S 03°26'00" W	116.42
C60	113.22	06°41'15"	970.00	N 03°31'48" E	113.15
C61	191.17	11°17'31"	970.00	N 05°27'36" W	190.86
C62	46.20	02°34'13"	1030.00	S 05°35'19" W	46.20
C63	175.22	09°44'49"	1030.00	S 00°34'12" E	175.01
C64	178.20	09°54'46"	1030.00	S 10°24'00" E	177.98

NUMBER	DIRECTION	DISTANCE
L7	S 04°55'46" W	39.83
L8	S 89°59'35" W	65.34
L9	N 13°10'16" W	60.00
L10	N 89°59'35" E	24.41
L11	N 42°32'19" W	33.80
L12	N 47°27'41" E	36.85
L13	S 47°30'49" W	36.81
L14	S 42°29'17" E	33.84

LEGEND

- IRON STAKE FOUND
- IRON STAKE WITH ALUMINUM CAP (PRO-TECH ENG. 2219) SET
- ANGLE IN FENCE/FENCE POST
- CONCRETE MONUMENT FOUND
- X — FENCE LINE
- P — OVERHEAD UTILITY LINE
- VOL PG — COMAL COUNTY REAL PROPERTY RECORDS
- DOC # — COMAL COUNTY REAL PROPERTY RECORDS DOCUMENT NUMBER
- VOL PG — COMAL COUNTY MAP AND PLAT RECORDS
- ( ) — DENOTES RECORD INFORMATION

SCALE 1"=200'

0 200 400

PRO·TECH ENGINEERING GROUP
INCORPORATED
100 E. San Antonio St., Suite 100
San Marcos, TX. 78666
(512) 353-3335

PLAN 5297
EO 14645
..\14645\UNIT ONE LOTS\14645one4.dwg
08/24/99 JMF

OFFICIAL USE
NOT FOR

Vol 13 pg 113

SOUTHERLAND/RCR VENTURE, LTD.
REMAINING 1390.06 ACRES OUT OF 1617.69 ACRES
DOC. #9906008863

WM. G. STRAWN SURVEY No. 74

F. LAMBRECHT SURVEY No. 853

NUMBER	DIRECTION	DISTANCE
L15	S 00°13'10" W	81.52
L16	S 00°38'18" W	139.80
L17	S 77°57'11" W	88.62
L18	S 33°48'39" W	36.50

NUMBER	ARC LENGTH	DELTA ANGLE	RADIUS	CHORD DIRECTION	CHORD LENGTH
C65	188.17	11°06'54"	970.00	N 16°39'49" W	187.88
C66	77.59	04°34'59"	970.00	N 24°30'46" W	77.57
C67	187.29	10°25'06"	1030.00	S 20°33'56" E	187.03
C68	18.51	01°01'47"	1030.00	S 26°17'23" E	18.51
C69	66.91	11°37'05"	330.00	N 20°59'45" W	66.80
C70	143.79	24°57'58"	330.00	N 02°42'14" W	142.66
C71	156.73	27°12'43"	330.00	N 23°23'06" E	155.26
C72	28.02	04°51'53"	330.00	N 39°25'24" E	28.02
C73	42.23	08°57'44"	270.00	S 22°19'23" E	42.19
C74	205.36	43°34'47"	270.00	S 03°56'55" W	200.45
C75	75.95	16°07'02"	270.00	S 33°47'50" W	75.70
C77	180.61	38°19'35"	270.00	N 14°51'23" E	177.26
C78	36.47	07°44'19"	270.00	N 08°10'37" W	36.44
C79	56.14	09°44'49"	330.00	S 36°58'55" W	56.07
C80	254.32	44°09'19"	330.00	S 10°01'51" W	248.07
C81	47.63	05°48'23"	470.00	S 80°51'24" W	47.61
C82	70.39	08°34'50"	470.00	S 88°03'02" W	70.32
C83	133.09	14°23'16"	530.00	N 85°08'49" E	132.74
C84	112.92	12°12'27"	530.00	S 86°14'13" W	112.71
C85	145.26	15°42'14"	530.00	S 72°16'52" W	144.81
C86	151.71	16°24'01"	530.00	S 56°13'45" W	151.19
C87	164.54	17°47'15"	530.00	S 39°08'07" E	163.88
C88	163.62	17°41'17"	530.00	S 21°23'51" W	162.97
C89	41.54	39°40'21"	60.00	S 49°51'58" W	40.72
C90	272.52	260°14'14"	60.00	S 79°54'39" W	91.77
C94	651.56	79°25'44"	470.00	N 52°37'35" E	600.62

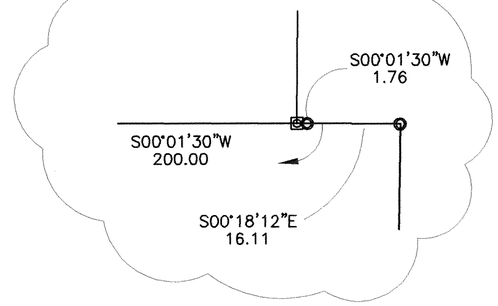

DETAIL
NOT TO SCALE

LEGEND

- IRON STAKE FOUND
- IRON STAKE WITH ALUMINUM CAP (PRO-TECH ENG. 2219) SET
- ANGLE IN FENCE/FENCE POST
- CONCRETE MONUMENT FOUND
- X — FENCE LINE
- P — OVERHEAD UTILITY LINE
- VOL/PG — COMAL COUNTY REAL PROPERTY RECORDS
- DOC # — COMAL COUNTY REAL PROPERTY RECORDS DOCUMENT NUMBER
- VOL/PG — COMAL COUNTY MAP AND PLAT RECORDS
- ( ) — DENOTES RECORD INFORMATION

PRO·TECH
ENGINEERING GROUP
INCORPORATED
100 E. San Antonio St., Suite 100
San Marcos, TX. 78666
(512) 353-3335

JACOB MOOS SURVEY No. 852
SUBDIVISION No. 1

SCALE 1"=200'
0 200 400

PLAN 5297
EO 14645
..\14645\UNIT ONE LOTS\14645one5.dwg
09/24/99 JMF

NOT FOR OFFICIAL USE

Vol 13 pg 114